Cambridge Assessment International Education
Cambridge International General Certificate of Secondary Education

CANDIDATE NAME	

CENTRE NUMBER						CANDIDATE NUMBER					

6852517698

DESIGN AND TECHNOLOGY **0445/42**

Paper 4 Systems and Control **May/June 2019**

1 hour

Candidates answer on the Question Paper.

No Additional Materials are required.

READ THESE INSTRUCTIONS FIRST

Write your centre number, candidate number and name on all the work you hand in.
Write in dark blue or black pen.
You may use an HB pencil for any diagrams or graphs.
Do not use staples, paper clips, glue or correction fluid.
DO **NOT** WRITE IN ANY BARCODES.

Section A
Answer **all** questions in this section.

Section B
Answer **one** question in this section.

You may use a calculator.

At the end of the examination, fasten all your work securely together.
The number of marks is given in brackets [ ] at the end of each question or part question.
The total of the marks for this paper is 50.

This document consists of **16** printed pages and **4** blank pages.

© UCLES 2019

Section A

Answer **all** questions in this section.

1 **(a)** Name **two** machines used in manufacturing that can be controlled by a computer.

1 .....

2 .....
[2]

(b) Give **two** benefits of using CAM in batch production.

1 .....

.....

2 .....

.....
[2]

2 **(a)** Fig. 1 shows a block diagram for the system used in a tumble drier.

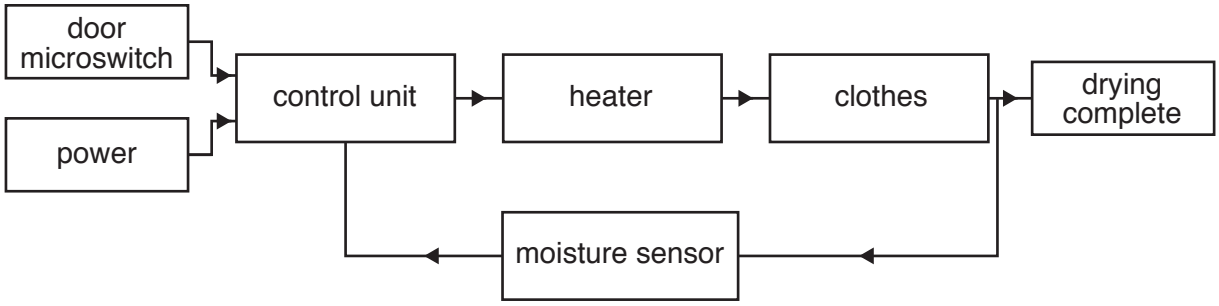

Fig. 1

On the list below draw lines from the item to the part it plays in the system.

Item	Part played in the system
door microswitch	process
control unit	output
moisture sensor	input
drying complete	feedback

[3]

(b) Fig. 2 shows a microswitch suitable for use as a sensor on the door of the tumble drier.

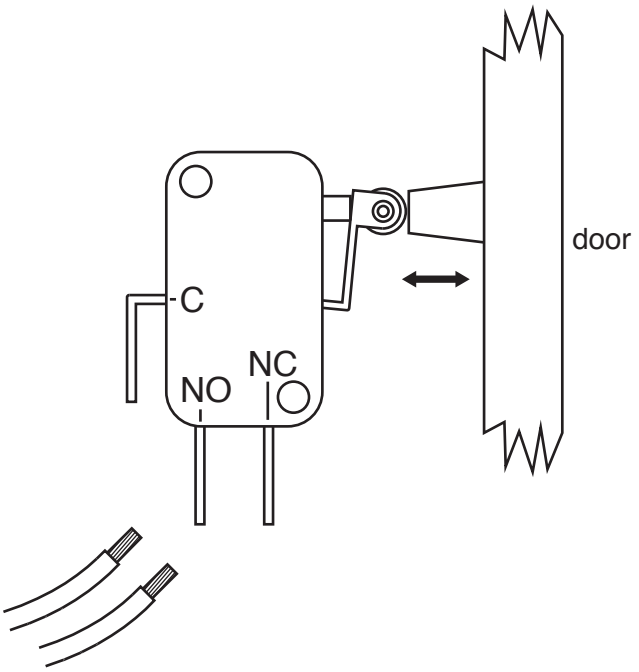

Fig. 2

Draw lines on Fig. 2 from the wires to the switch terminals to allow an electrical connection between the two wires when the door is closed. [2]

(c) Explain why the door microswitch is needed on the tumble drier.

.....

.....

..... [2]

3 **(a)** The body of a tumble drier is normally made from sheet steel.
State the name given to this type of structure.

..... [1]

(b) Use sketches and notes to show how a flat sheet of steel can be made more resistant to bending and torsion without adding any extra parts to it.

[2]

4 Give **two** reasons for using gears in a mechanism.

1 .....

2 .....
[2]

5 Use sketches and notes to show **one** method of fixing a spur gear to a shaft without allowing the spur gear to rotate on the shaft.

[2]

6 State the conversion of motion that takes place in the following mechanisms.

Cam and follower ..... to .....

Screw thread and nut ..... to ..... [4]

7 **(a)** Fig. 3 shows two methods of fixing wires to a circuit board.

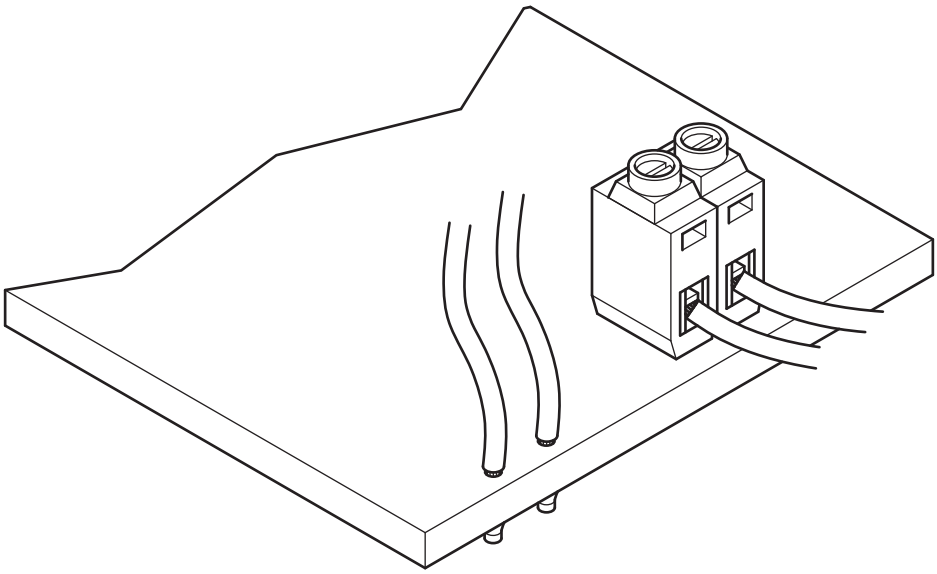

Fig. 3

Give **one** benefit for each method.

Soldering .....

.....

Terminal block .....

.....
[2]

(b) Wires used for connecting to the circuit board will normally have a plastic covering.
Give **one** purpose for the plastic covering.

.....

..... [1]

Section B

Answer **one** question from this section.

8 **(a)** Fig. 4 shows a table of materials that can be used for a load bearing beam and a list of properties that are required in the beam.

(i) For each property place **one** tick (✓) in the material column in the table that **best** matches the property required.
One has been done for you.

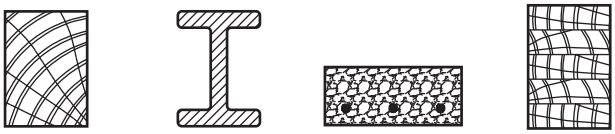

Property required	wood	steel	concrete	laminated wood
renewable natural resource	✓			
resists torsion and bending				
long lasting and no maintenance needed				
can be easily formed into curves				

Fig. 4

[3]

(ii) A beam made from wood could contain natural defects.
State **two** natural defects that can occur in wood.

1 .....

2 .....

[2]

(b) Fig. 5 shows examples of three structures.

A

B

C

Fig. 5

(i) Circle the type of structure used in each example.

A	frame structure	shell structure	mass structure
B	frame structure	shell structure	mass structure
C	frame structure	shell structure	mass structure

[3]

(ii) State **two** methods that have been used to strengthen structure **A**.

1 .....

2 .....

[2]

(c) Fig. 6 shows a folding aluminium work platform used for building work or decorating.

Fig. 6

(i) The platform is designed to take stationary and moving loads.
Explain, using examples, what is meant by each type of load.

.....

.....

.....

..... [4]

(ii) Fig. 7 shows part of the safety label attached to the leg of the work platform.

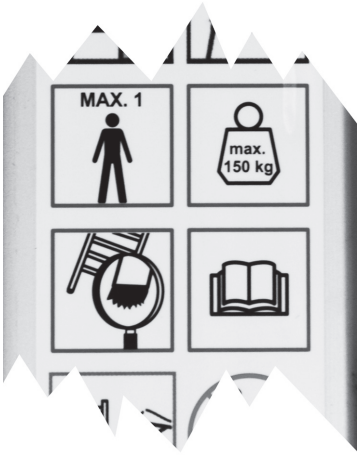

Fig. 7

Explain how the manufacturer has considered Factor of Safety when designing the work platform.

.....

.....

.....

..... [2]

(iii) Fig. 8 shows the work platform with the loads from a user shown in position.

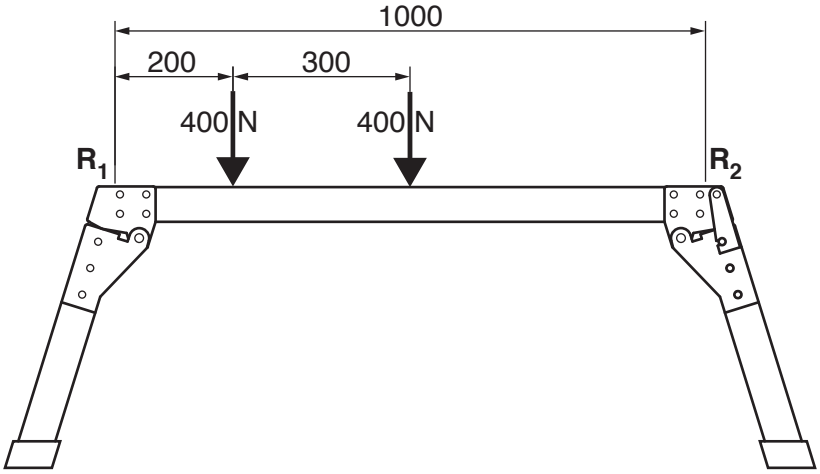

Fig. 8

Calculate the reactions at $\mathbf{R_1}$ and $\mathbf{R_2}$.

.....

.....

.....

..... [3]

(iv) Describe how the stress in a structure can be calculated.

.....

.....

..... [2]

(d) Use sketches and notes to show what is meant by the following forces in a structure:

Tension

Compression

Shear

Torsion

[4]

9 Fig. 9 shows a vee belt and pulley system.

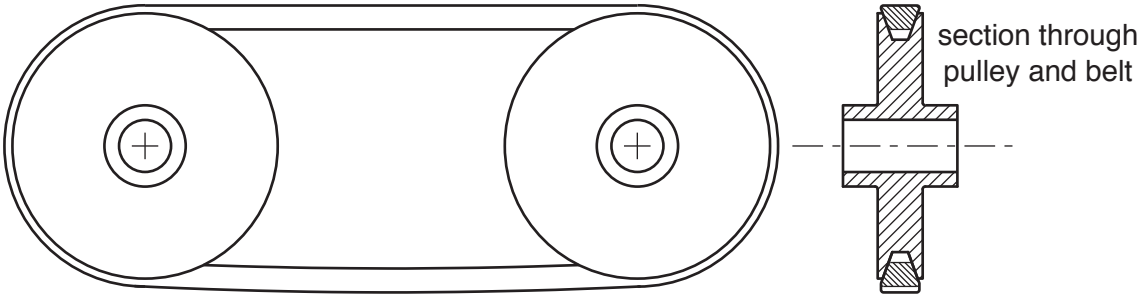

Fig. 9

(a) **(i)** State **one** advantage of this system over a flat belt.

..... [1]

(ii) Use sketches and notes to show a method of adjusting the tension of the vee belt without moving either of the pulleys.

[3]

(b) Fig. 10 shows a pulley system used for lifting heavy loads.

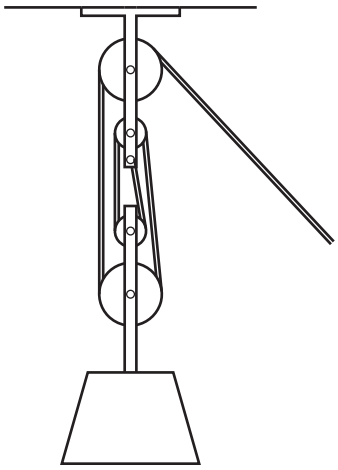

Fig. 10

(i) State the velocity ratio of the pulley system.

..... [1]

(ii) Explain why the actual mechanical advantage of the pulley system will not be as high as the velocity ratio.

.....

.....

..... [2]

(iii) The pulleys shown in Fig. 10 are made from hardwood with a hole drilled through to act as a plain bearing.
Fig. 11 shows details of one of the pulleys.

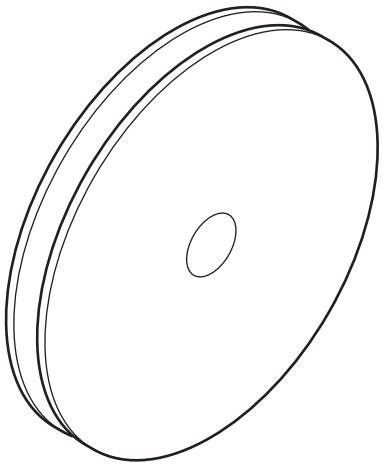

Fig. 11

Use sketches and notes on Fig. 11 to show an alternative bearing in position that will increase the actual mechanical advantage of the system. [2]

(c) Fig. 12 shows a foot pump for inflating car tyres.

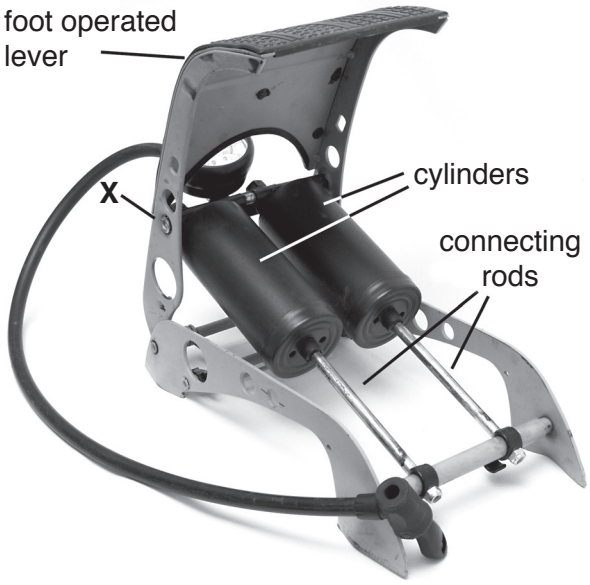

Fig. 12a

Fig. 12b

(i) Label the positions of the effort, load and fulcrum on the foot operated lever in Fig. 12b. [3]

(ii) Explain why the joint at **X** cannot be a fixed joint.

.....

.....

..... [2]

(iii) When the foot operated lever is pressed the connecting rods will move into the cylinders to compress the air.
State the type of motion that is caused when this happens.

..... [1]

(iv) A similar motion could be provided by a crank and slider mechanism.
Use sketches and notes to describe the operation of a crank and slider mechanism.

[3]

(d) Fig. 13 shows a cam and follower.

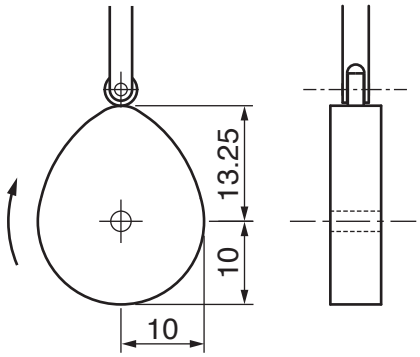

Fig. 13

(i) Name the type of follower shown in Fig. 13.

..... [1]

(ii) Calculate the 'lift' of the cam.

..... [1]

(iii) Starting from the given position, use the words **dwell**, **rise** and **fall** to complete the table describing follower movement as the cam rotates.

Angle moved by cam	Follower movement
90°	
180°	
270°	
360°	

[3]

(iv) A different type of follower is shown in Fig. 14.

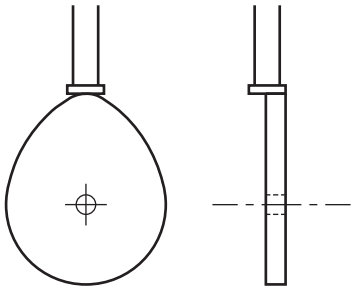

Fig. 14

Describe the result of having the cam follower offset from the centre of the cam profile.

.....

.....

..... [2]

10 **(a)** A simple electronic circuit is shown in Fig. 15.

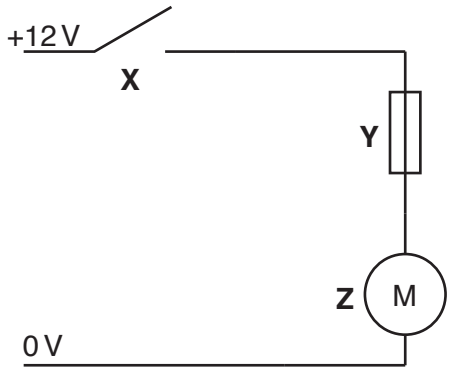

Fig. 15

(i) State the names of components **X**, **Y** and **Z**.

X .....

Y .....

Z .....
[3]

(ii) Draw on Fig. 15 to show conventional current flow in the circuit. [1]

(iii) State the unit used to measure current flow in a circuit.

..... [1]

(b) Fig. 16 shows part of a sensing circuit.

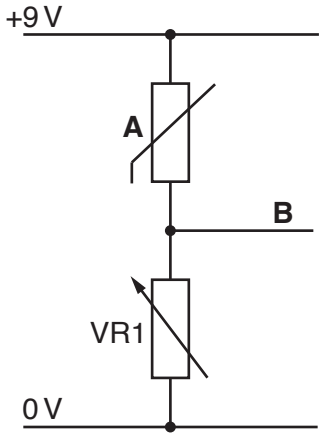

Fig. 16

(i) State the physical property being sensed by component **A**.

..... [1]

(ii) Component **A** forms one half of a potential divider with VR1.
Describe what is meant by a potential divider.

.....

..... [2]

(iii) Calculate the voltage at point **B** when the resistance of component **A** is 62 kΩ and VR1 is set to 78 kΩ.

Use the formula $V_{out} = \frac{R2}{R1 + R2} \times V_{in}$

.....

.....

.....

..... [3]

(iv) Draw a voltmeter on Fig. 16 connected to read the voltage at point **B**. [2]

(v) State why the reading on the voltmeter may be different to the calculated voltage.

.....

..... [1]

(vi) Fig. 17 shows the potential divider output connected to an operational amplifier (Op Amp), which will be used to compare two voltages.

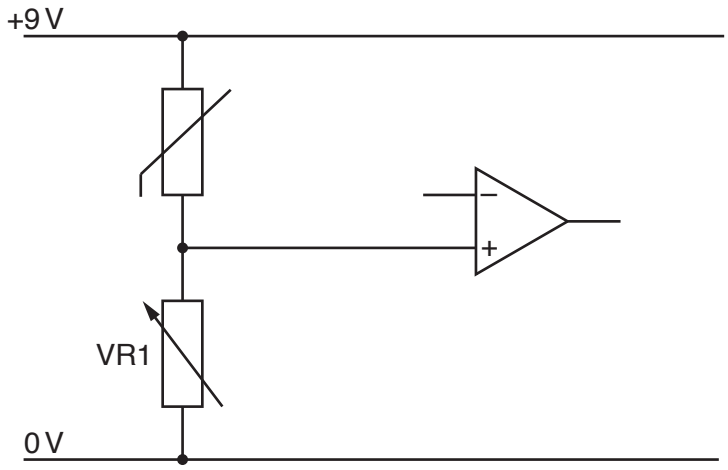

Fig. 17

Add two resistors to the circuit to give 4.5 V at the inverting terminal of the Op Amp. State the values of the resistors. [3]

(c) Fig. 18 shows a circuit that will cause a time delay before the LED starts to glow.

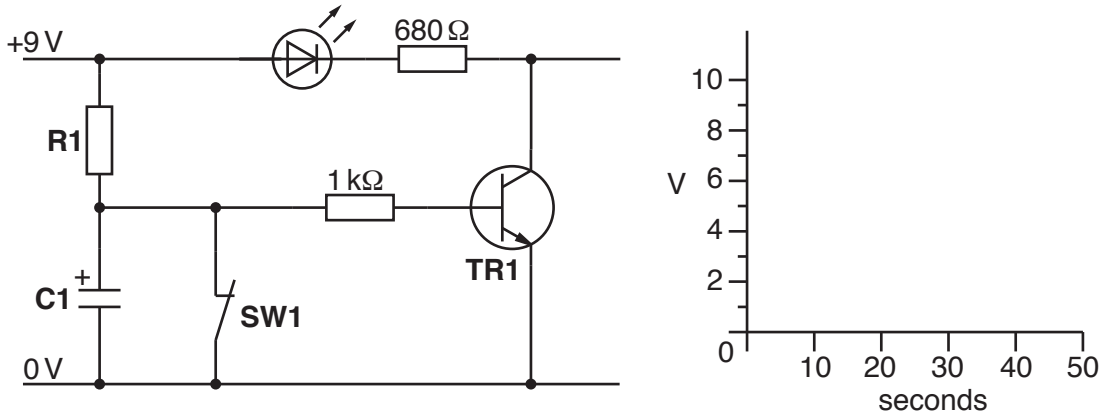

Fig. 18

(i) When **SW1** is opened capacitor **C1** is allowed to charge.
Calculate the time constant for the capacitor.

Use the formula t = C1 × R1 R1 is 22 kΩ C1 is 470 μF

.....

.....

.....

..... [2]

(ii) Complete the graph on Fig. 18 to show how the voltage across **C1** changes after **SW1** is opened. [2]

(iii) Describe the operation of transistor **TR1** after switch **SW1** is opened.

.....

.....

..... [2]

(d) A programmable IC could be used instead of a resistor capacitor network to provide a time delay.
Give **two** functional benefits of using a programmable IC to provide a time delay.

1 .....

.....

2 .....

.....
[2]

BLANK PAGE

BLANK PAGE

BLANK PAGE

BLANK PAGE

Permission to reproduce items where third-party owned material protected by copyright is included has been sought and cleared where possible. Every reasonable effort has been made by the publisher (UCLES) to trace copyright holders, but if any items requiring clearance have unwittingly been included, the publisher will be pleased to make amends at the earliest possible opportunity.

To avoid the issue of disclosure of answer-related information to candidates, all copyright acknowledgements are reproduced online in the Cambridge Assessment International Education Copyright Acknowledgements Booklet. This is produced for each series of examinations and is freely available to download at www.cambridgeinternational.org after the live examination series.

Cambridge Assessment International Education is part of the Cambridge Assessment Group. Cambridge Assessment is the brand name of the University of Cambridge Local Examinations Syndicate (UCLES), which itself is a department of the University of Cambridge.

© UCLES 2019